Pertanika J. Soc. Sci. & Hum. 23 (2): 495 - 507 (2015)

PERTANIKA JOURNALS

SOCIAL SCIENCES & HUMANITIES

Journal homepage: http://www.pertanika.upm.edu.my/

Spiritual Leadership Values and Organisational Behaviour in Malaysian Private Institutions of Higher Education

Wong, S.C.[1]*, Mahmud, M.M.[2] and Omar, F.[3]

[1]Psychology Department, School of Life Sciences, Heriot Watt University, No. 1 Jalan Venna P5/2, Precint 5, 62200 Putrajaya Malaysia

[2]American Degree Transfer Programme, Sunway University Jalan Universiti, Bandar Sunway, 46150 Petaling Jaya, Selangor, Malaysia

[3]Department of Psychology, School of Science and Humanities, Universiti Kebangsaan Malaysia, 43600 Bangi Selangor, Malaysia

ABSTRACT

Malaysia wants to be a part of the bandwagon in the industry of higher education, thus, the number of private higher education institutions has grown drastically in the recent years. Moreover, the assimilation of cultures and values among the races in Malaysia has contributed distinctive organisational cultures that affect leadership values and organisational behaviour specifically in the private institutions of higher education sector. The purpose of this study is to identify spiritual leadership values embraced by the leaders in private institutions of higher education, as well as the relationship between spiritual leadership values and organisational behaviour (job satisfaction, organizational commitment and intention to quit). In total, 302 academics and administrative staff from 7 private institutions of higher education in Malaysia participated in the study. Questionnaire and non-probability sampling were used in the data collection for this study. The findings show that love, hope, and peace are associated with membership and meaning, meanwhile membership and meaning are associated with organisational behaviour. Hence, this study has contributed in leadership training that will affect the turnover rate and ultimately result a cost effective managerial policing in the Malaysian private institutions of higher education.

Keywords: Spiritual leadership, Values, Organisational behaviour, Private higher educational institutions

ARTICLE INFO

Article history:
Received: 10 June 2014
Accepted: 26 November 2014

E-mail addresses:
s.c.wong@hw.ac.uk; mandyw99@gmail.com (Wong, S.C.),
malissam@sunway.edu.my (Mahmud, M. M.),
faas@ukm.my (Omar, F.)
*Corresponding author

ISSN: 0128-7702 © Universiti Putra Malaysia Press

INTRODUCTION

Leadership is one of the important factors in an organisation and it is needed at all levels in the organisation. Many scholars and managers agree that effective leadership is required to meet most organisational challenges (DuBrin, 2010). Without effective leadership, it can have an impact on the organisation to achieve profit and productivity. In higher education leadership, it is also important in that it helps to bring success to the institution through providing a conducive teaching and research environment for academics (Shattock, 2010) and career development for administrative staff (Wasseem, 2010).

Leaders who are grounded with values congruent with the organisation's values consequently are able to translate those values into action, which will have significant impact to the organisation (Stanley, 2008). More, specifically, leadership based on values provides long-term wisdom and sustainability to leaders, employees and businesses (Pruzan, 2008). These values that are integrated in leadership, are related to organisational behaviour such as leader integrity, organisational commitment and performance (Leroy & Palanski, 2012), trust from supervisor and intention to quit (Mulki, Jaramillo, & Locander, 2006), as well as spirituality and intrinsic job satisfaction (Marschke, Preziosi, & Harrington, 2011).

Spiritual leadership is a theory which focuses on intrinsic values that motivate individual intrinsically (Fry, 2003). According to Sendjaya (2007), spiritual leadership is driven by a sense of higher calling, finding purpose in life, promoting values that transcend self-interest and giving meaning to work. Spiritual leaders are concerned about social and moral matters, for example, being responsible for oneself, enthusiastic at work, able to take up social responsibility, organised and reflective in the tasks given instead of caring about matters that involve only self-interest (Huang & Shih, 2011). According to Fry, Vitucci and Cedillo (2005), spiritual leadership comprises values, attitudes and behaviour that motivate individual intrinsically through transcendent vision and values that are congruent in individual, departmental and organisational level. This then increases organizational commitment, improves performance level and employees' well-being to achieve organisational transformation.

This study is built on Fry and his colleagues' spiritual leadership theoretical framework that is based on western culture and values (2005). Hofstede (2001), a renowned researcher who conducted studies on culture differences in work related values, discovered four main organizational values; power distance, uncertainty avoidance, individualism-collectivism and masculinity-femininity. These organisational values indicated values differences between Western and Asian culture, which unquestionably draw a clear and cogent understanding between the two primary cultures. On the other hand, Chen and Li (2013) observed that there are differences in cultural dimension between the Chinese and the U.S. samples

in their spiritual leadership study based on Fry's spiritual leadership model. Jogulu (2010) also found differences in the culture and leadership in Malaysia and Australia. In other words, culture has a tremendous impact on leadership.

Malaysia has more than 450 private institutions of higher education (Department of Higher Education, 2014). It grows rapidly in the recent years to achieve the vision of becoming the world class centre of knowledge in the year 2020. Malaysia consists of three main races - Chinese, Indian and Malay, and each race embraces and practises their culture and values in the society. The uniqueness of the assimilation facets among the three races makes Malaysia a distinctive context for any organisational research. Henceforth, the focus of the study is to investigate the spiritual leadership values in Malaysia and whether the values in Fry's spiritual leadership can be generalised for the institutions of higher education in Malaysia. The latter context bears a myriad of distinctive co-values and co-cultures which in turn has an impact on employees' organizational behaviour.

Spiritual Leadership

According to Fairholm (1996), spirit is a set of internal values and principles embraced by people that have an impact on identity and meaning in life. He further explained that spiritual leadership focuses on ethical values which are the American core values. These values enable leaders to make connection with employees' internal world of moral values subsequently strengthen and enhance employees' commitment and relationships with organisation. Fry presented a spiritual leadership theory in a causal model that has three components; leaders' value attitudes and behaviour, followers need for spiritual survival in the organization and organizational outcomes (Fry, Vitucci, & Credillo, 2005). Values embraced by leaders affect organisational commitment and productivity through a sense of being members of the organisation and meaning of work given by the employees of the organisation. The three main spiritual values are altruistic love, hope / faith and vision. Altruistic love is the sense of wholeness, harmony and well-being from the interaction of the leader and the employees. Hope / faith are the values embraced by leaders toward the organisation. Lastly, vision describes the organization's direction and reasons why leaders embraced it (Fry, Vitucci, & Credillo, 2005). Hence, these values affect organisational effectiveness.

In spiritual leadership studies, love, hope and vision are the spiritual leadership values which comprise values, attitudes and behaviours that are related to membership and calling (Fry, 2003; Fry, Vitucci & Cedilo, 2005). Leaders who love and care for their employees and have faith in the organisation's vision, together with their employees, will craft this vision which is congruent with their principles and values. Subsequently, this union will give employees the meaning and purpose to work by having a sense of being appreciated or membership to the organisation. This is referred to as employees' spiritual survival

according to Fry and his colleagues (2005). Meanwhile, Chen and Li (2013) grouped employees' membership and meaning or calling as a source of motivation to study employees' spiritual survival in an organisation. Membership is a source of motivation toward organisation and meaning or calling is a source of motivation toward work. Both motivational principles are imperative for employees to survive at their workplace.

Values embraced by Malaysians

The Malays, Chinese and Indians are the three races that make up the majority of the population in Malaysia. For them, values serve as guidance in their daily life. One of the essential values embraced by the Malays is a sense of loyalty and emotional interdependence to the group, and harmonious relationship with others to provide the meaning for one's existence in a social context (Abdullah 1996). Other values that the Malays embrace are honesty (Zawawi, 2008), intellect or kindness "budi" (Abdullah, 1996), and team work (Ahmad, 2001). On the one hand, the influence of Confucianism is strong among the Chinese. Confucianism values the maintaining of harmony and mutual respect in hierarchical society and different places (Lin, Ho, & Lin, 2013). Confucius valued "ren" which is to maintain a good social relationship, humanity and moral values. The Chinese upheld Confucius values such as kindness, benevolence and being approachable (Tsui, Wang, Xin, Zhang, & Fu, 2004). On the other hand, the Indians value teamwork (Subramaniam, Othman, & Sambasivan, 2010), corporation and participation (Abdullah, 1996) and consideration (Zawawi, 2008). A study that focuses on Malaysian work values discovered that tact and politeness "sopan santun" are the core values (Zawawi, 2008). These values appreciate work relationship among colleagues at workplace. In a study by Wong, Mahmud and Omar (2012), they pointed out the common values for Malaysian leadership, which are peace and harmony. Referring to the values embraced by the three races, a collective society such as Malaysia accents on kindness, teamwork, maintaining good relationship, corporation and consideration, which are integral in maintaining stability and equilibrium of the organisation. Hence, the common ground for all the values is to enjoy peace and harmony at the workplace in the context of Malaysian organisations.

In Fry, Vitucci and Cedillo's study (2005), altruistic love encompasses harmony, love and care from leader and organisation. This value is able to replace jealousy, envy and anxiety with peace and harmony among employees of an organisation. Therefore, employees who are loved and cared for by the organisation and leaders will enjoy peace and harmony at the workplace. In other words, peace and harmony are additional values deemed important by employees and leaders. Hence, the proposed hypothesis for this study is:

Hypothesis 1: Spiritual leadership values (love, hope, vision, peace and harmony) have

a positive relationship with membership and meaning / calling.

Membership and meaning/calling and organizational behaviour

Organisational behaviour is an understanding of individual, group and organisational behaviour that has impact on organization performance and effectiveness (Kreitner & Kinicki, 2012). In this study, the organisational behaviour focuses on individual level where job satisfaction, organisational commitment and intention to quit are the fundamental elements at this level. According to Fry, Vitucci and Cedillo (2005), membership and meaning/ calling will provide an organisational favourable outcome from the aspect of productivity and organisational commitment. Employees who feel understood and appreciated (membership) and give meaning to their work have good productivity and organizational commitment. Other studies have also shown that meaningful work and sense of community are associated with organisation commitment, job satisfaction and intention to quit (Milliman, Czaplewski, & Feruguson, 2003). Sense of community refers to membership as employees believe they belong to the family of the organisation and this subsequently affects organisational behaviour. The study is consistent with the findings from Duffy and his colleague (2012), where calling and work meanings are associated with job satisfaction and commitment. Hence, the proposed hypothesis is:

Hypothesis 2: Membership and calling have a positive relationship with organisational behaviour (job satisfaction, organisational commitment and intention to quit).

In this study, spiritual leadership values consist of love, hope, vision and peace and harmony. These values are related to membership and calling through spiritual survival. Therefore, membership and calling are related to job satisfaction, organisational commitment and intention to quit. Fig.1 shows the research framework of spiritual leadership values, spiritual survival and organisational behaviour of the study.

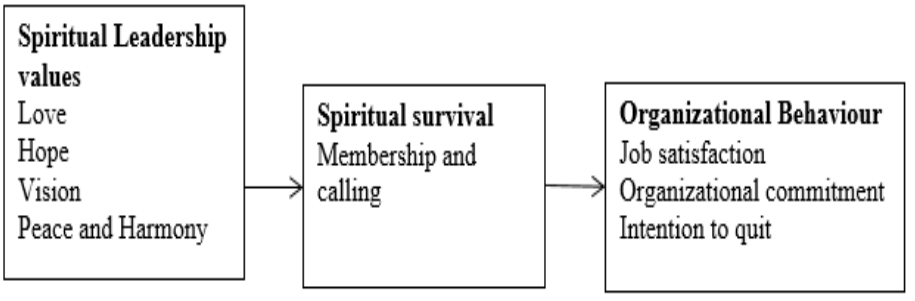

Fig.1. Research Framework

METHOD

A non-probability sampling was used in this study for data collection. Copies of the questionnaire were distributed to 480 academics and administrative staff from 7 private higher educational institutions in Klang Valley, Malaysia. From the 480 questionnaires distributed, 323 questionnaires were returned while 21 questionnaires were discarded due to incompleteness. Therefore, the remaining 302 questionnaires were used for the data analysis.

The survey questionnaire consists of 5 sections. The first section measures spiritual leadership values with 8 items on peace and harmony, which was developed and validated by the researchers and there were 26 items on Spiritual Leadership scale; vision, hope, love, meaning and membership (Fry, Vitucci, & Cedillo, 2005). The second section has 8 items on job satisfaction (Firth, Mellor, Moore, & Loquet, 2004); Section 3 has 5 items on organisational commitment (Firth, Mellor, Moore, & Loquet, 2004); Section 4 has 6 items on performance (Pearce & Porter, 1986) and the last section has 4 items on intention to quit (Firth, Mellor, Moore, & Loquet, 2004; Lee & Mowday, 1987). The questionnaire uses the 5-point Likert scale with a range of 1 "strongly disagree" to 5 "strongly agree".

RESULTS

Reliability and Validity

Confirmatory factor analysis was used to examine reliability and validity of the measurement instrument in this study. Cronbach Alpha shows satisfactory to good reliability, ranging from 0.727 to 0.926. According to Nunnally and Bernstein (1994), a reliability coefficient with more than 0.7 is considered satisfactory (Table 1).

Convergent and discriminant validity was conducted to investigate the construct validity of the measurement instrument. Hair, Anderson, Tatham and Black (1998) recommended the use of factor loading, composite reliability and average variance extracted (AVE) to study convergent validity. The factor loading for the parameters ranged from 0.73 to 0.89, with all the parameters above 0.5. The composite reliability readings range from 0.75 to 0.88, which exceeds 0.7 as recommended by Hair, Anderson, Tatham, and Black (1998). The AVE readings range from 0.58 to 0.69, the values are greater than 0.5 as suggested by Fornell and Larker (1981). The results are depicted in Table 1.

Discriminant validity analysis used AVE of a latent variable to compare with other squared correlation latent variables or constructs. The AVE of the construct should be greater than the other squared correlation latent variable or constructs. The results shown in Table 2 indicated that all the AVE of the constructs are greater than the squared correlation of the latent variables.

Measurement model

The measurement model consists of spiritual leadership values (hope, love, and peace), spiritual survival (membership and calling) and organisational behaviour (job

TABLE 1
Internal Reliability and Convergent Validity

Construct	Item	Internal reliability	Convergent Validity		
		Cronbach Alpha	Factor Loading	Composite reliability	AVE
Peace	P1	.905	0.822	0.87	0.68
	P2		0.849		
	P3		0.838		
	P4		0.805		
	P5		0.801		
	P6		0.834		
Love	L1	.926	0.854	0.86	0.68
	L2		0.820		
	L3		0.842		
	L4		0.825		
	L5		0.822		
	L6		0.765		
Hope	H1	.905	0.755	0.88	0.69
	H2		0.859		
	H3		0.869		
	H4		0.844		
Membership	M1	.921	0.848	0.87	0.68
	M2		0.885		
	M3		0.779		
	M4		0.802		
	M5		0.826		
Satisfaction	S1	.727	0.773	0.76	0.58
	S2		0.744		
Quit	Q1	.777	0.965	0.75	0.58
	Q2		0.725		
	Q3		0.518		
Commitment	C1	.876	0.860	0.86	0.68
	C2		0.834		
	C3		0.779		

satisfaction, organisational commitment and intention to quit). The measurement model of vision showed poor fit with the data; hence, it was eliminated for further analysis. Membership and calling were left with single variable after a factor analysis was performed. The results, which are similar with findings from Chen and Li (2013), are shown in Tables 1, 2, and 3, and Fig.2.

TABLE 2
Discriminant validity

Constructs	1	2	3	4	5	6	7
Hope	0.69						
Love	0.45	0.68					
Peace	0.19	0.39	0.69				
Membership	0.36	0.54	0.47	0.68			
Satisfaction	0.24	0.35	0.35	0.52	0.58		
Commitment	0.41	0.33	0.22	0.33	0.34	0.68	
Quit	0.07	0.10	0.11	0.14	0.15	0.11	0.58

Notes: Diagonal represents the AVE others are squared correlations

TABLE 3
Confirmatory factor analysis for measurement model

	x^2	*df*	Cmin/ df	CFI	GFI	AGFI	NNFI/ TLI	NFI	IFI	RMSEA
Hope	50.32	5	10.01	.95	.94	.81	.91	.95	.95	.17
Love	53.23	9	5.91	.96	.94	.86	.94	.96	.96	.13
Peace	207.10	35	5.92	.94	.86	.78	.92	.93	.94	.13
Membership	41.83	5	8.37	.96	.95	.93	.93	.96	.96	.16
Satisfaction	.00	Saturated model								
Commitment	.00	Saturated model								
Quit	.00	Saturated model								

Measurement model in this study used AMOS 16 with maximum likelihood estimate to analyse the model fit. The measurement model used Comparative Fit Index (CFI; Bagozzi & Yi, 1988; Hu & Bentler, 1999), Goodness-of-fit index (GFI; Chau & Hu, 2001), Adjusted Goodness-of-fit index (AGFI; Chau & Hu, 2001), Normed Fit Index (NFI; Bentler & Bonnet, 1980), Non-Normed Fit Index (NNFI or TLI; Bentler & Bonnet, 1980; Tucker & Lewis, 1973) and Root Mean Square Error of Approximation (RMSEA; Browne & Cudeck, 1993) fit indices to assess the model. CFI, GFI, NNFI/TLI and NFI for all the measurement models are above 0.9, 0 indicating a poor fit and 1 indicating the best fit. On the other hand, RMSEA with a lower index which is less than 0.08, indicates the data fit with the model (Browne & Cudeck, 1993). Generally, the measurement model indicated good fit of data and model, satisfactory level of reliability, convergent validity and discriminant validity.

Structural model

Model for goodness of fit indices indicated the path coefficients for spiritual leadership values to membership vary. Path coefficient peace and harmony to membership and love to membership are significant (<.001), however, hope to membership is not

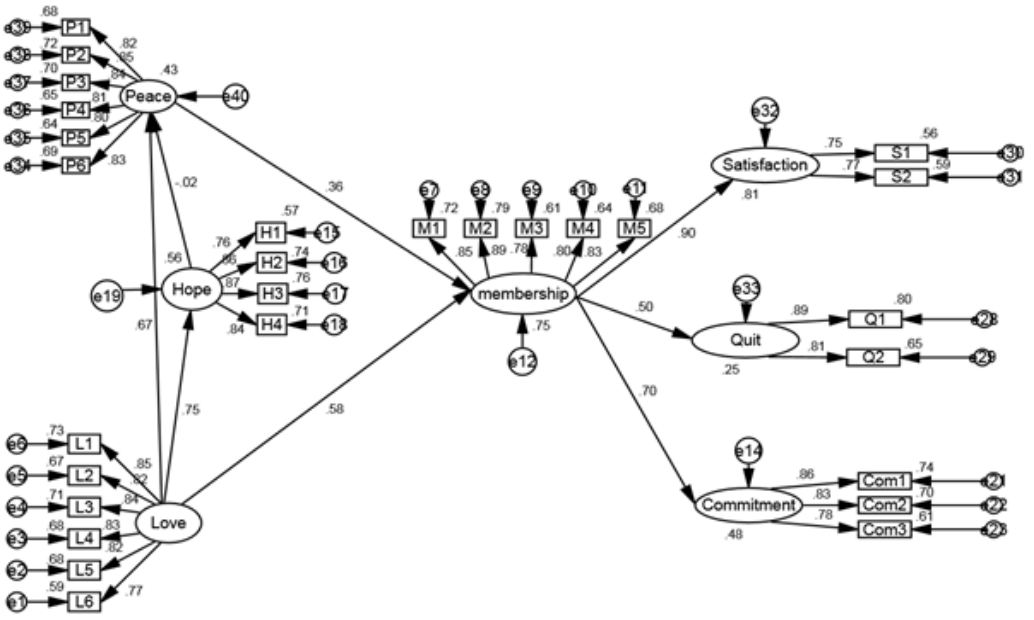

Fig.2 : Structural Model for spiritual leadership values and organizational behaviour

TABLE 4
Structural model and fit indices

Fit index	Study	Recommended Values	Sources
df	456		
x^2	1072.332		
x^2/df	2.352	<3.00	Bagozzi and Yi (1988)
P value	0.000	>0.05	
Comparative Fit Index (CFI)	0.918	>0.90	Bagozzi and Yi (1988)
Hu and Bentler (1999)			
Incremental fit index (IFI)	0.907	>0.90	Bentler (1990)
Goodness-of-fit index (GFI)	0.818	>0.90	Chau and Hu (2001)
Adjusted Goodness-of-fit index (AGFI)	0.867	>0.80	Chau and Hu (2001)
Normed Fit Index (NFI)	0.849	>0.90	Bentler and Bonnet (1980)
Non-Normed Fit			
Index or Tucker Lewis (NNFI or TLI)	0.911	>0.90	Bentler and Bonnet (1980)
Root mean square error of approximation (RMSEA)	0.067	<0.08	Browne and Cudeck (1993)

significant (>.001). Path coefficient from membership to organisational behaviour; job satisfaction, organisational commitment and intention to quit are significant (<.001). All paths are significant (<.001), except for hope to peace and hope to membership. The results are shown in Figure 2 and Table 4. The first hypothesis is partially supported and the second hypothesis is fully supported.

DISCUSSION AND CONCLUSION

The purpose of this study is to examine the spiritual leadership values in the context of Malaysian private institutions of higher education and the relationship of the values with organisational behaviour. The results yielded the internal reliability, convergent and discriminant validity is good. In addition, the measurement model and structural model of spiritual leadership values and organisational behaviour also obtained a good fit between model and data. In other words, the spiritual leadership values are shown applicable in the Malaysian context. The results also indicated spiritual leadership values, love, hope and peace through membership and calling enhance job satisfaction, organisational commitment and reduce the intention to quit in a Malaysian context.

In this study, love is related to hope and peace. According to Fry, Vitucci and Cedillo (2005), love is care, concern and appreciating others and self. Leaders who care, show concern, are considerate and walk their talk will develop employees' faith / hope toward the organisation. At the same time, care and concern from leaders also affect peace and harmony of the organisation. Leaders who serve the organisation and treat the employees fairly, provide support to employees, and be a good listener to them, employees will enjoy peace and harmony in the organisation. The finding is similar to Reave's study (2005) on spiritual leader practices such as respect, treating others fairly, being a good listener, as well as showing care and concern, and recognising employees. Collective culture among Asians is being able to relate with the leader like their own family members (Jogulu & Ferkins, 2012) because the bond will bring harmony and peace in an organisation. The findings of this study showed that leaders who lead the three races from different backgrounds in educational institutions should care and show concern for their employees, have faith in the organisation, as well as develop peace and harmony within the organisation.

The findings also showed that spiritual leadership values are associated with membership and calling. Membership and calling are the values for leaders' and employees' spiritual survival in an organisation. In this study, peace and love values have helped developed a sense of membership and calling or understanding and appreciation among employees. When leaders serve the employees, treat them fairly, provide them support, and listen to them, they are able to have a sense of membership and calling. Employees feel they are appreciated and recognized by the organisation and leaders. Thus, this study is consistent with the finding of Permaruoan,

Saufi, Raja Kasim and Balakrishnan (2013), whereby the feeling of being appreciated and connected with leaders is related with organisational commitment and passion. This feeling affects organisational behaviour; job satisfaction, organisational commitment and intention to quit. Besides the preceding organizational behaviour, love is an equally vital value. According to Fry, Vitucci and Cedillo (2005), love is associated with membership and membership is associated with organisational behaviour. In other words, spiritual leadership values affect organisational behaviour through the values upheld by the leaders and the organisation. The findings suggested that leaders who embrace spiritual leadership values will enhance employees' sense of membership and calling, subsequently, increase job satisfaction level, organisational commitment level and reduce intention to quit.

This study focuses on spiritual leadership values in private institutions of higher education and organisational behaviour. Nonetheless, it is unclear if the findings can be generalised into public institutions of higher education because further study is needed to be done in the public institutions of higher education. There are two implications of the study. This study examined spiritual leadership values developed by Fry (2003) and Malaysian leadership values in education institution. Hence, this study can be used for research in spiritual leadership and organisational spirituality in Malaysia. In addition, organisations may use the findings of spiritual leadership values for leadership training and development because leaders who are equipped with spiritual leadership values will create positive social tone in an organisation, and thus, employees will feel appreciated and valued by which successively lessen the intention to quit and yield a cost effective in management regulating.

REFERENCES

Abdullah, A. (1996). *Going Global*. Kuala Lumpur: Malaysian Institute of Management.

Ahmad, K. (2001). Corporate Leadership and Workforce Motivation in Malaysia. International *Journal of Commerce and Management, 11*(1), 82-101.

Bagozzi, R. P., & Yi, Y. (1988). On the evaluation of structural equation models. *Journal of the Academy of Marketing Science, 16*(1), 74-94.

Bentler, P. M. (1990). Comparative fit indexes in structural models. *Psychological Bulletin, 107*(12), 238-246.

Bentler, P. M., & Bonnet, D. C. (1980), Significance Tests and Goodness of Fit in the Analysis of Covariance Structures. *Psychological Bulletin, 88*(3), 588-606.

Browne, W. M., & Cudeck, R. (1993). Alternative ways of assessing model fit. In K. A. Bollen & J. Scott Long (Eds), *Testing structural equation models* (pp. 136-162). London: Sage publication.

Chau, P. Y. K., & Hu, P. J. (2001). Information technology acceptance by individual professionals: a model comparison approach. *Decision Sciences, 32(*4), 699-719.

Chen, C., & Li, C. (2013). Assessing the spiritual leadership effectiveness: The contribution of follower's self-concept and preliminary tests for moderation of culture and managerial position. *The leadership Quarterly, 24*(1), 240-225.

Department of Higher Education. (2004, July 14). *List of Private Education Institution*. Retrieved August 21, 2014, from http://jpt.mohe.gov.my/menudirektori.php

DuBrin, A. J. (2010). *Principles of Leadership*. (6th ed.). Australia: South-Western Cengage Learning.

Duffy, R. D., Bott, E. M., Allan, B. A., Torrey, C. L., & Dik, B. J. (2012). Perceiving a Calling, Living a Calling and Job Satisfaction: Testing a Moderated, Multiple Mediate Model. *Journal of Counselling Psychology, 59*(1), 50-59.

Fairholm, G. W. (1996). Spiritual leadership: fulfilling whole-self needs at work. *Leadership & Organization Development Journal, 17*(5), 11-17.

Firth, L., Mellor, D. J., Moore, K. A., & Loquet, C. (2004). How can managers reduce employee intention to quit? *Journal of Managerial Psychology, 19*(1), 170-180.

Fornell, C., & Lacker, D. F. (1981). Evaluating Structural Equation Models with Unobservable Variables and Measurement Error. *Journal of Marketing Research, 1*(1), 39-50.

Fry, L. W. (2003). Toward a Theory of Spiritual Leadership. *The Leadership Quarterly, 14(*6), 693-727.

Fry, L. W., Vitucci, S., & Cedillo, M. (2005). Spiritual leadership and army transformation: Theory, measurement, and establishing a baseline. *The Leadership Quarterly, 16*(5), 835-862.

Hair, J. F., Anderson, R. E., Tatham, R. L., & Black, W. C. (1998). *Multivariate Data Analysis with Readings* (4th ed.). Jew Jersey: Prentice Hall, Englewood Cliffs.

Hofstede, G. (2001). *Culture's consequences: Comparing values, behaviors, institutions, and organizations across nations* (2nd ed.). London: Sage publication.

Hu, L. T., & Bentler, P.M. (1999). Cut off criteria for fit indexes in covariance structure analysis: Conventional criteria versus new alternatives. *Structural Equation Modelling, 6*(1), 1-55.

Huang, Y., & Shih, H. (2011). The Prosocial and Moral Character of the Spiritual Leader. S*ocial Behavior and Personality, 39*(1), 33-40.

Jogulu, U. D. (2010). Cultural linked leadership style. *Leadership and organization Development Journal, 31*(8), 705-719.

Jogulu, U., & Ferkins, L. (2012). Leadership and Culture in Asia: the case of Malaysia. *Asia Pacific Business Review, 18*(4), 531-549.

Kreitner, R., & Kinicki, A. Z. (2012). *Organizational Behavior* (10th ed.). Boston: McGraw-Hill.

Lee, T. M., & Mowday R. T. (1987). Voluntarily Leaving An Organization: An Empirical Investigation of Steers and Mowday's Model of Turnover. *Academy of Management Journal, 30*(4), 721-743.

Leroy, H., & Palanski, M. E. (2012). Authentic Leadership and Behavioral Integrity as Drivers of Follower Commitment and Performance. *Journal Business Ethics, 107*(3), 255-264.

Lin, L., Ho, Y., & Lin, W. (2013). Confucian and Taoist Work Values: An Exploratory Study of the Chinese Transformational Leadership Behavior. *Journal Business Ethics, 113(*1), 91-103.

Marschke, E., Preziosi, R., & Harrington, W. J. (2011). How sales personnel view the relationship between job satisfaction and spirituality in the workplace. *Journal of Organizational Culture, Communication and Conflict, 15*(2), 71-110.

Milliman, J. Czaplewski, A. J., & Ferguson, J. (2003). Workplace spirituality and employee work attitudes: An exploratory empirical assessment. *Journal of organizational Change management, 16*(4), 426-447.

Mulki, J. P., Jaramillo, F., & Locander, W. B. (2006). Effects of ethical climate and supervisory trust on salesperson's job attitudes and intentions to quit. *Journal of Personal Selling and sales management, 26*(1), 19-26.

Nunnally, J. C., & Berstein, I. H. (1994). *Psychometric Theory.* New York: McGraw-Hill.

Pearce, J., & Porter, L. (1986). Employee responses to formal performance appraisal feedback. J*ournal of Applied Phycology, 71*(1), 211-218.

Permarupan, P. Y., Saufi, R. A., Raja Kasim, R. S., & Blakrishnan, B. (2013). The impact of organisational climate on employee's work passion and organisational commitment. *Procedia Social and Behavioral Sciences, 107*, 88-95.

Pruzan, P. (2009). Spiritual-based Leadership in Business. *Journal of Human Values, 14*(2), 101-114.

Reave, L. (2005). Spiritual values and practices related to leadership effectiveness. *The Leadership Quarterly, 16*(5), 655-687.

Sendjaya, S. (2007). Conceptualizing and Measuring Spiritual Leadership in Organizations. *International Journal of Business and Information, 2*(1), 104-125.

Shattock, M. (2010). *Managing Successful Universities* (2nd Edn.). Glasgow: McGraw-Hill Education.

Stanley, D. (2008). Congruent leadership: Values in action. *Journal of Nursing Management, 16*(5), 519-524.

Subramaniam, A., Othman, R., & Sambasivan, M. (2010). Implicit leadership theory among Malaysian managers: Impact of the leadership expectation gap on leader-member exchange quality. *Leadership & Organization Development Journal, 31*(4), 351 – 371.

Tsui, A. S., Wang, H., Xin, K. R., Zhang, L., & Fu, P. P. (2004). Let a thousand flowers bloom: variation of leadership styles among Chinese CEOs. *Organizational Dynamics, 33*(1), 5-20.

Tucker, L. R., & Lewis, C. (1973). A reliability coefficient for maximum likelihood factor analysis. *Psychometrika, 38(*1), 1–10.

Waseem, M. (2010). Relative Importance of Pay Level Satisfaction, Career Development Opportunities, and Supervisor Support in Perceived Organizational Support. *Journal of Yasar University, 5(*19), 3264-3227.

Wong, S. C., Mahmud, M., & Omar, F. (2012, December 10-11). *An Exploratory Study of Spiritual Leadership Values in Malaysia*. Paper presented at the International Studying Leadership Conference Perth, Australia.

Zawawi, D. (2008). Cultural Dimensions among Malaysian Employees. *International Journal of Economics and Management, 2*(2), 409-426.